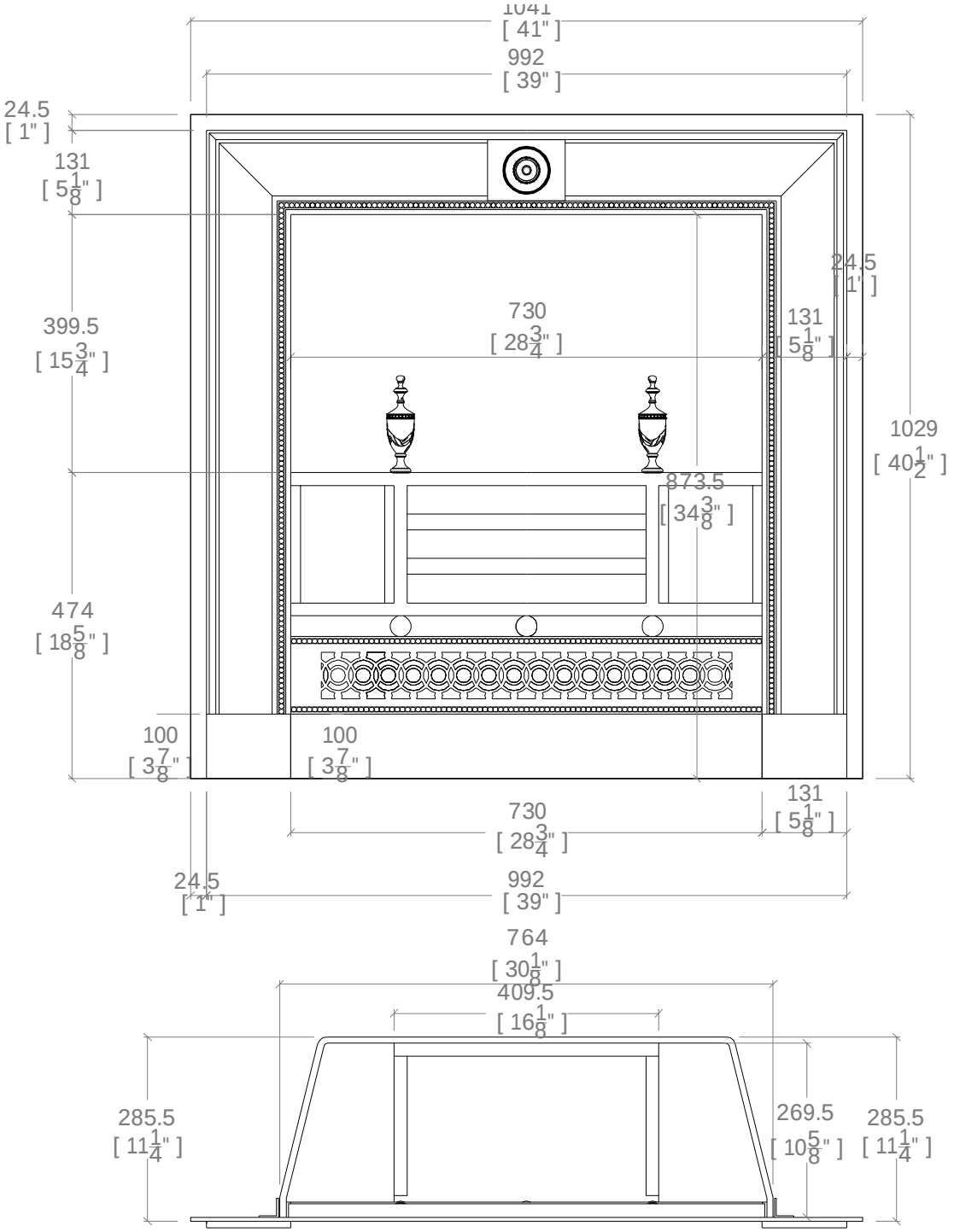

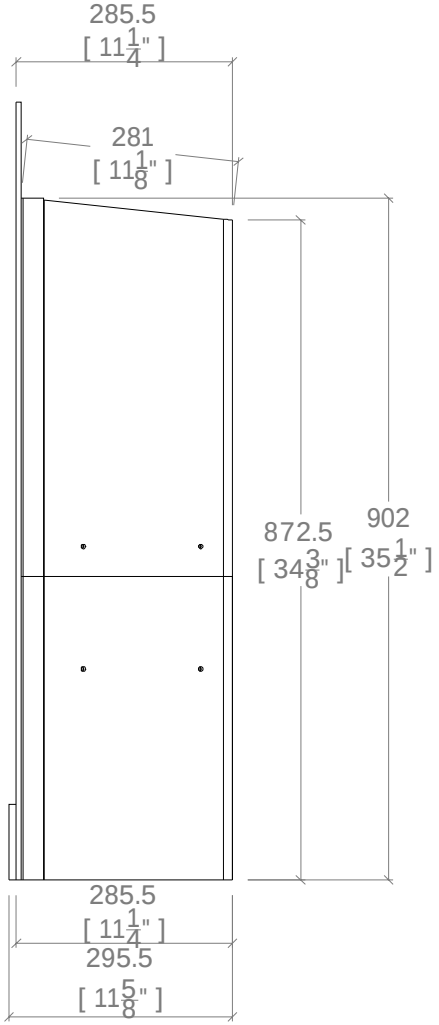

CHESNEY'S

Head Office: 194-202 Battersea Park Road, Battersea, London SW11 4ND
Telephone: 020 7627 1410 Fax: 020 7622 1078
Web Site: www.chesneys.co.uk E mail: sales@chesneys.co.uk

CHAMBERLAIN

Date: 05/05/2015 full scale & 1:10
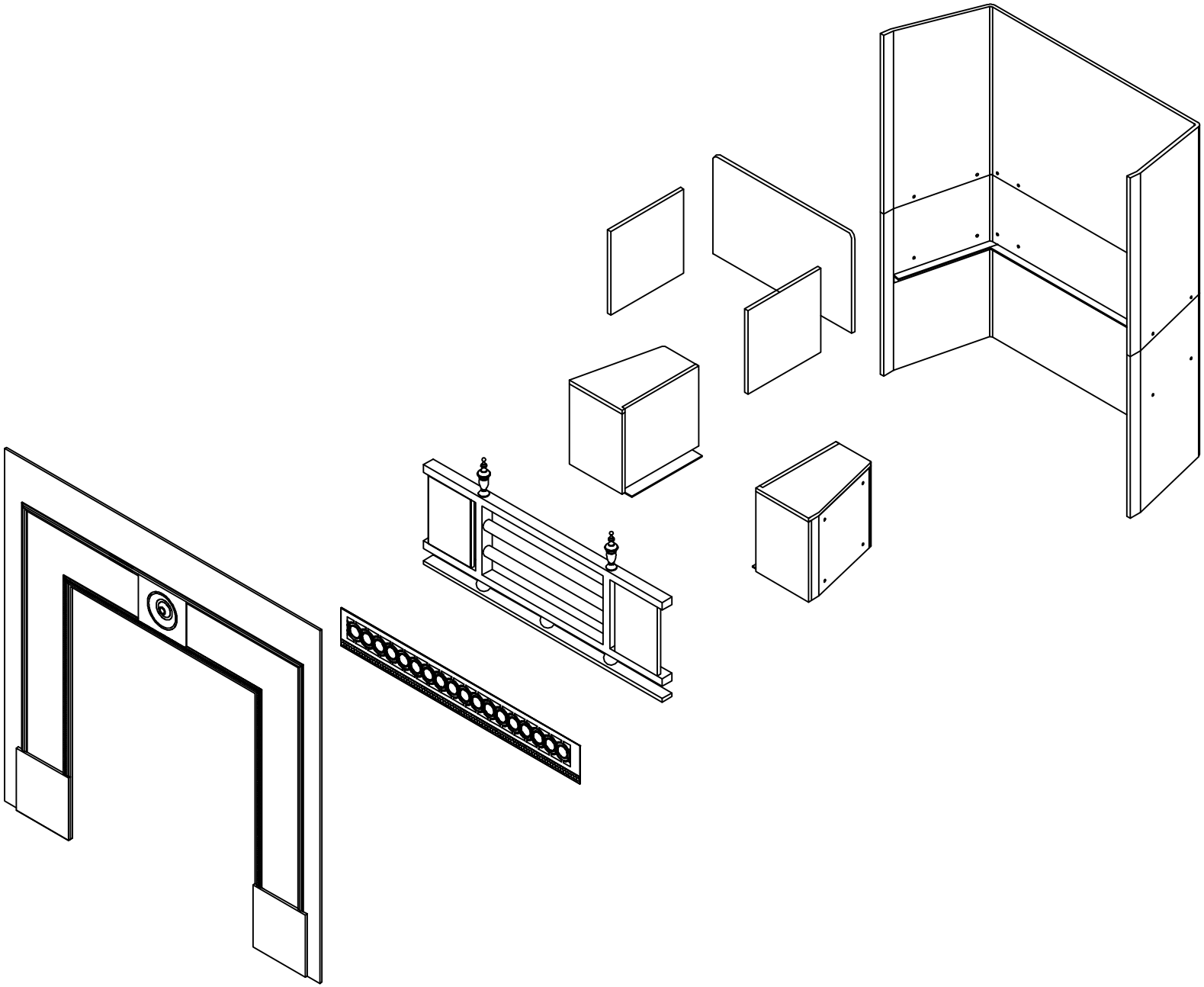
DRAWING NO. 31930D