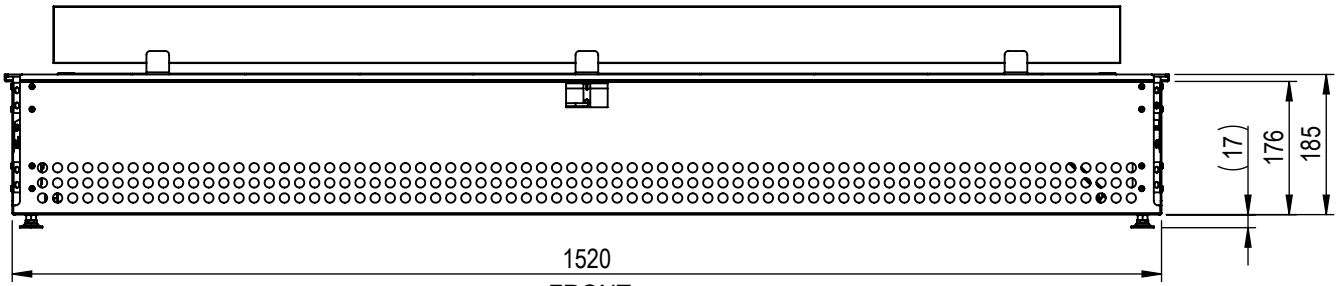

FRONT

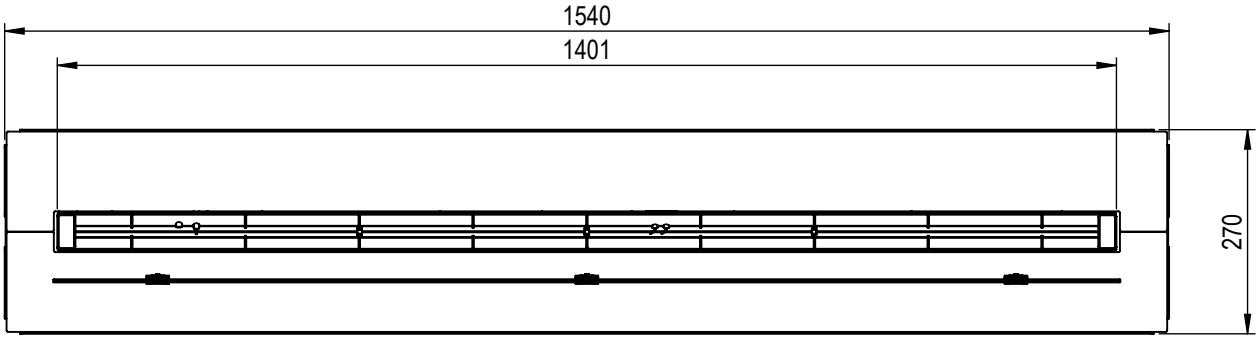

TOP

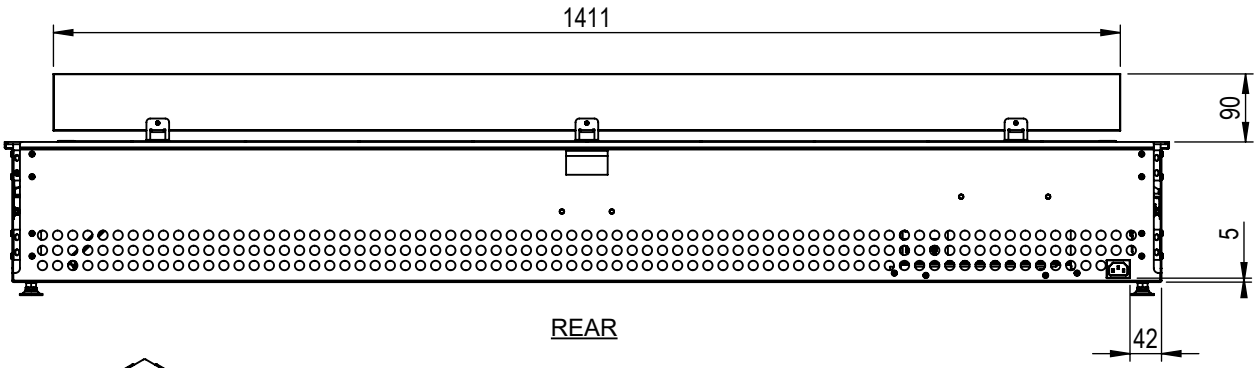

REAR

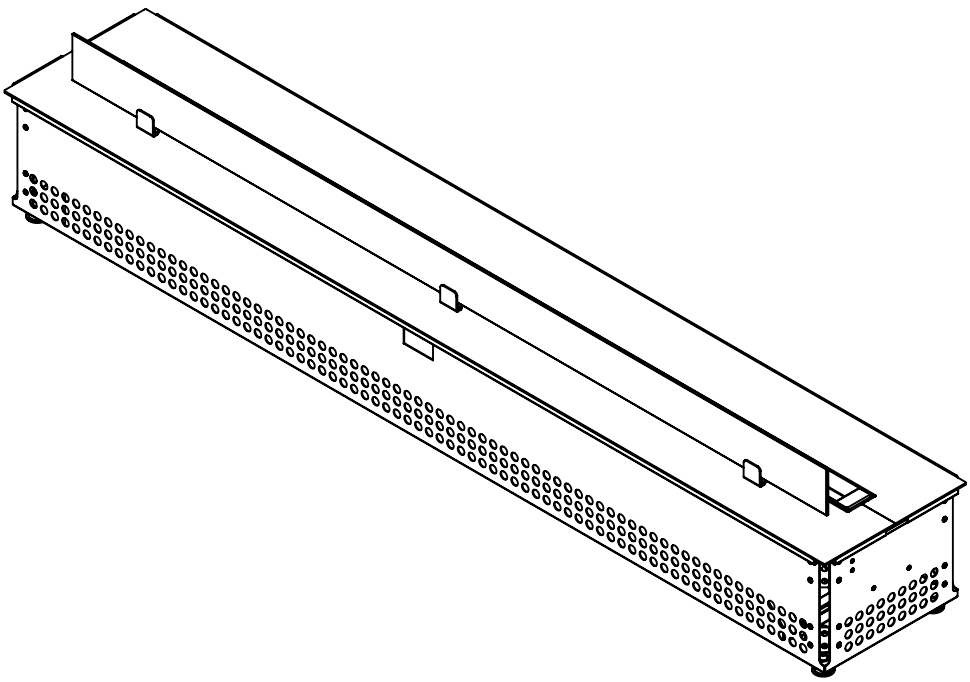

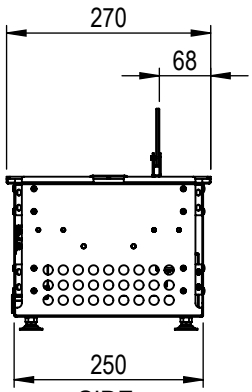

SIDE