REV.	CNG NOTE	CNG BY	DATE

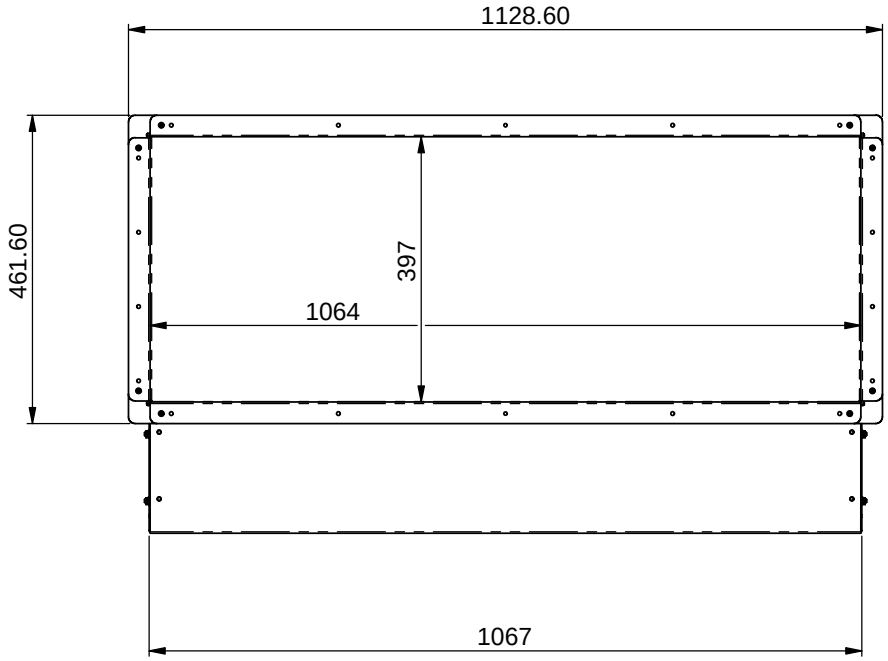

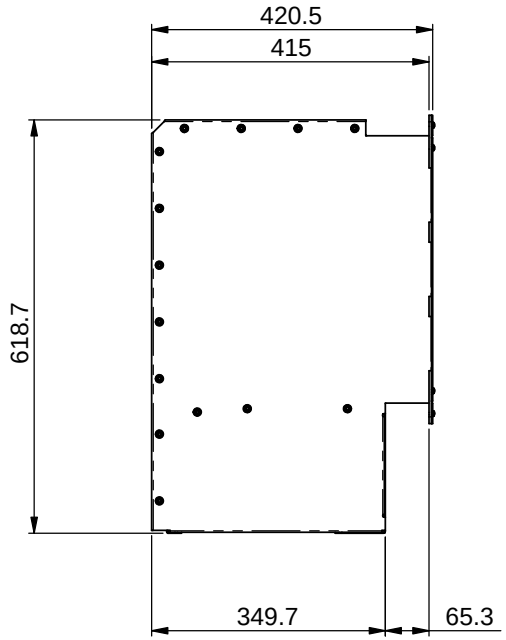

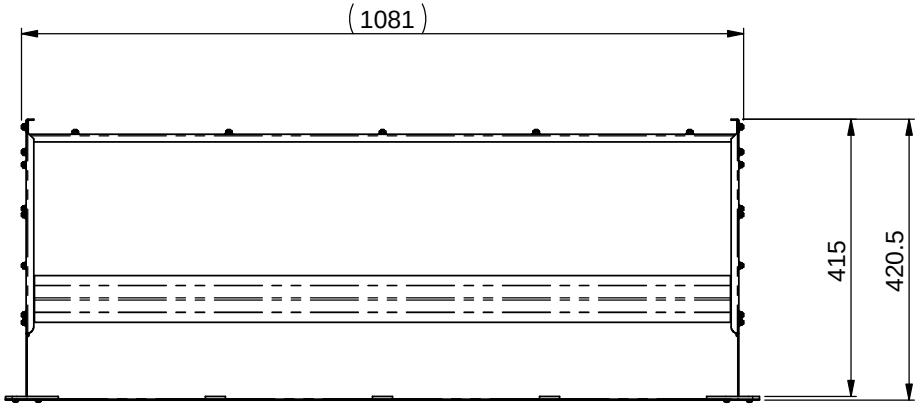

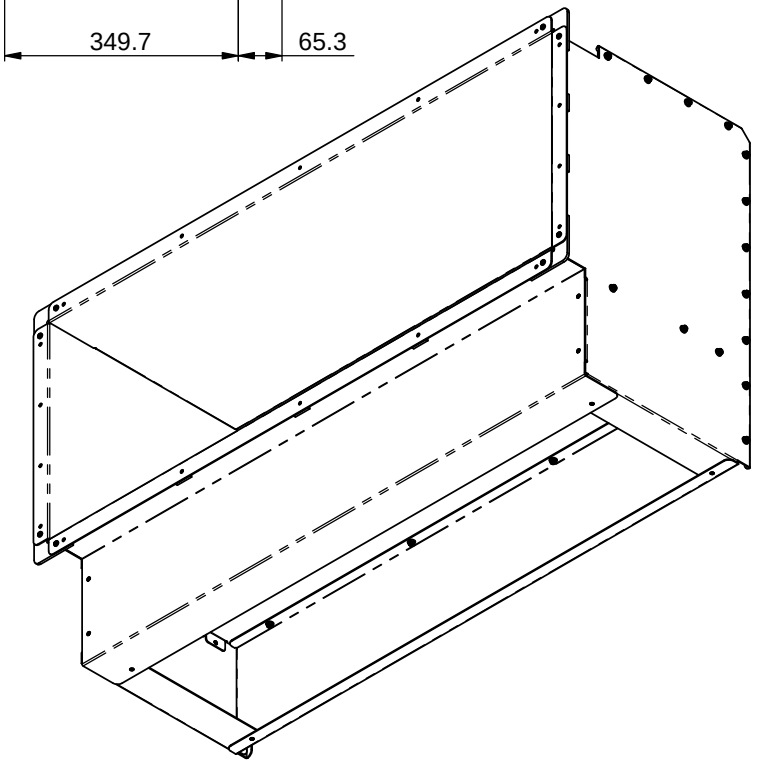

UNLESS OTHERWISE SPECIFIED: DIMENSIONS ARE IN MILLIMETERS SURFACE FINISH: TOLERANCES: LINEAR: ± 0.2 mm ANGULAR: ± 0.2 °	DEBUR AND BREAK SHARP EDGES	THICKNESS: mm WEIGHT: 28402.35 g DO NOT SCALE DRAWING	MATERIAL: SEE BOM FINISH:	ALCHEMY	TITLE: BIO WALL BOX SUB-ASSEMBLY 1000	DWG NO. 3A17300 DRAWN CRG · DATE 20 January 2022 14:03:16 · SHEET 2 OF 3	REVISION A SCALE:1:8 A3

PRINT DATE :26/01/2022